REVISIONS			
SYM.	DESCRIPTION	DATE	APPD
A	REVISED FOR COMMON USE		

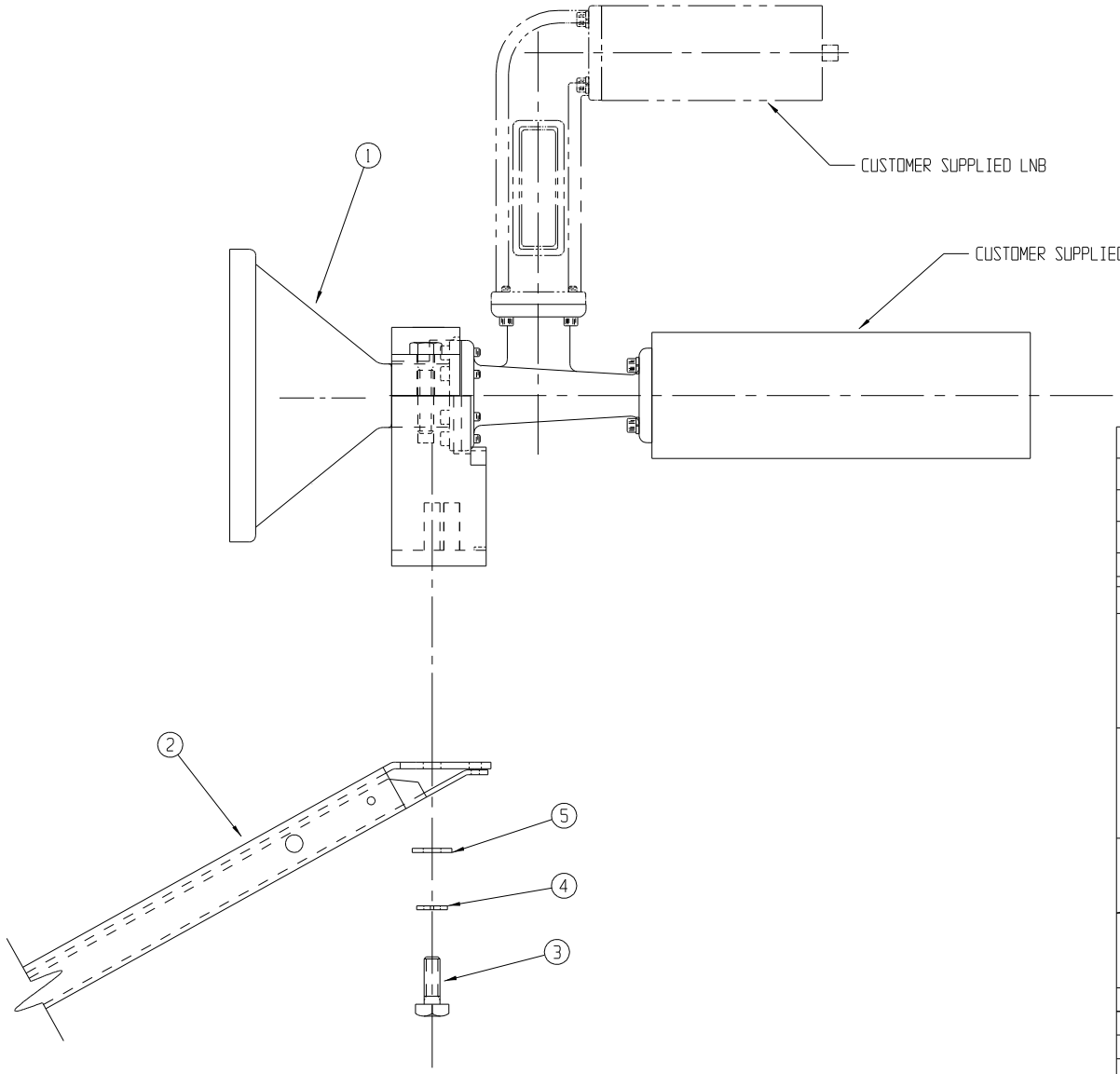

ITEM	DESCRIPTION	REQ.	PART NO.
5	1/4 FLATWASHER	2	8201-040
4	1/4 LOCKWASHER	2	8202-040
3	1/4-20 X .75 ZN HHCS	2	8030-006
2	FEED SUPPORT	1	VARIES
1	FEED ASSEMBLY	1	VARIES

PRODELIN CORPORATION

TITLE

Ku BAND OMT - OMT/TRF RADIO MOUNTING INSTRUCTIONS

MATERIAL

FINISH

THIS DOCUMENT CONTAINS PROPRIETARY DATA AND IS INTENDED ONLY TO CONVEY INFORMATION TO OUR CUSTOMERS, PROSPECTIVE CUSTOMERS AND VENDORS. IT SHALL NOT BE REPRODUCED, COPIED, COMMUNICATED TO OTHERS OR USED AS A BASIS FOR THE MANUFACTURE, MODIFICATION OR SALE OF ANY APPARATUS WITHOUT THE SPECIFIC WRITTEN PERMISSION OF PRODELIN CORP.

DIMENSIONS ARE IN DECIMAL INCHES. UNLESS OTHERWISE NOTED TOLERANCES ON FINISHED DIMENSIONS ARE AS FOLLOWS:

.X = ± .1 .XXX = ± .010

.XX = ± .05 ANGULAR ± 1°

NEXT ASS'Y

CODE IDENT. NO. 94661

DRAWN	6-14-2000	BY	DHB
CHECKED	6-18-00	BY	CLT
ENGR.	6/20/00	BY	RAH
MFG APVD		BY	

4096-619

REV. A

SCALE NONE

SH. 1 OF 1